JOSEF约瑟

组合互感器 户外 油浸式
Combination transformer outdoor Oil-insulated

JLS-3,6,10,35 型组合互感器
JLS-3,6,10,35 combination transformer

概述 Description

本产品主要由组合互感器和电度表箱两部分组成，组合互感器由两台或三台单相电压互感器和电流互感器组成，用25#变压器油作绝缘介质，一、二次出线端均用瓷套管安装在面板上。电度表箱装在组合互感器侧面，由一只有功电度表和一只无功电度表组成，具有计量精度高、重量轻、安装方便、防窃电等优点。

The product mainly consists two parts, combined mutual- inductor and watt-hour meter than. The former is made up to two or three single-phase voltage mutual-inductors and current mutual-inductor and current mutual-inductor, which adopts 25# mutual inductor oil as insulating medium and whose primary and secondary line ends are both installed on the panel by porcelain bushing. Watt-hour meter tank is fixed on the flank of combined mutual-inductor and comprises one active watt-hour meter and reactive watt-hour meter, which has high-precision measurement, light weight, convenient install-ation and electricity theft resistance.

The power measuring tank is applicable to three- phase system net with rated voltage of 6,10,35kV and rated frequency of 50Hz.

型号含义 Type designation

J L S - 3,6,10,27.5, 35

- 3,6,10,27.5, 35 — 电压等级，kV(KVVoltage class,KV)
- S — 三相油浸式(Three-phaseoil-immersed)
- J L — 电流电压组合互感器(Current-voltage combined transformer)

技术参数 Technical data

1.产品性能符合GB1207-1997、GB1208-1997;
2.额定电压：6kV、10kV、35kV;
3.准确等级：0.5和0.2级、0.5S和0.2S级;
4.额定变比：电压比6000/100 1000/100 3500/100电流比5~300/5(大电流变比可以定作)。
1.The product function is in accordance with GB1207-1997、GB1208-1997;
2.Rated voltage:6kV,10kV,35kV;
3.Accurated grande:0.5and 0.2 0.5S and 0.2S;
4.Rated ratio : ratio-voltage 6000/100 10000/100 35000/100 ratio=current5~300/5(High ratio-current can be set).

型号 Type	额定电压比 Rated voltage ratio(A)	额定电流比 Rated current ratio(A)	频率 frequency (Hz)	电压互感器准确等级及额定输出(VA) Voltage transformer Accurate grande and Rated output(VA)		电流互感器准确等级及额定输出(VA) Current transformer Accurate grande and Rated output(VA)		额定绝缘水平(kV) Rated insulating level(kV)	标准代号 Standard code
				0.2Class	0.5Class	0.2Class	0.5Class		
JLS-3	3000/100	5-300/5	50	20	25	10	10	3.6/24/75	GB1208-97 GB1207-97 GB17201-97
JLS-6	6000/100	5-300/5	50	20	25	10	10	7.2/32/75	
JLS-10	6300/110	5-300/5	50	20	25	10	10	7.2/32/75	
	10000/100	5-300/5	50	25	25	10	10	12/42/75	
JLS-35	35000/100	5-300/5	50	50	50	10	10	10.5/95/185	

JOSEF约瑟

组合互感器 户外 油浸式
Combination transformer outdoor Oil-insulated

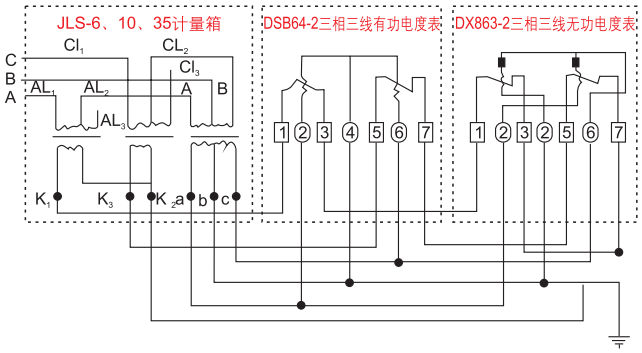

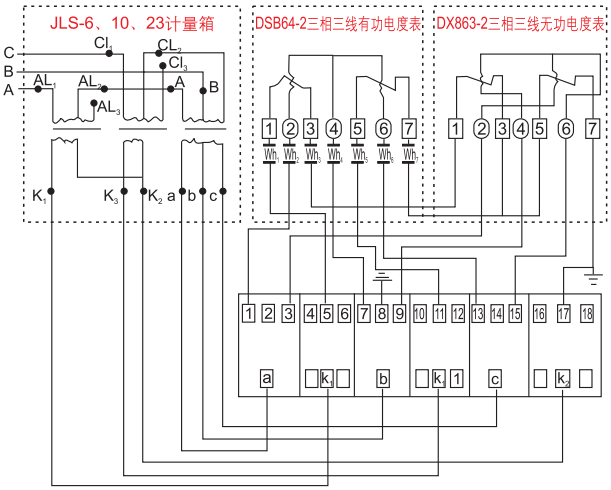
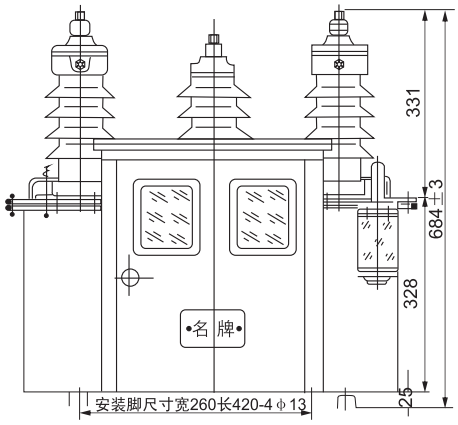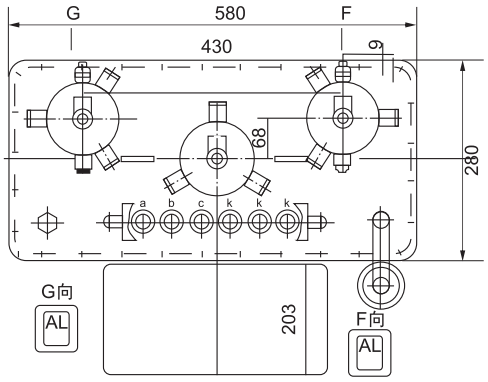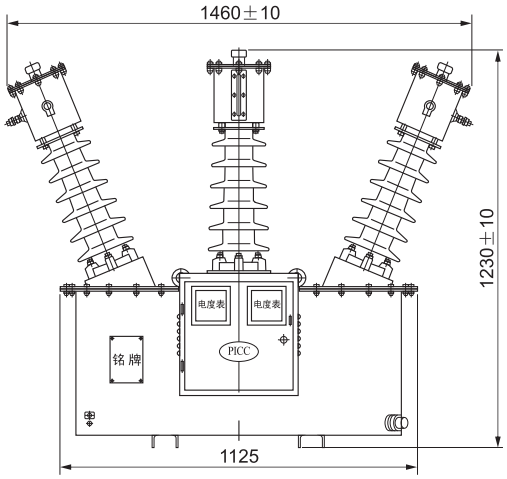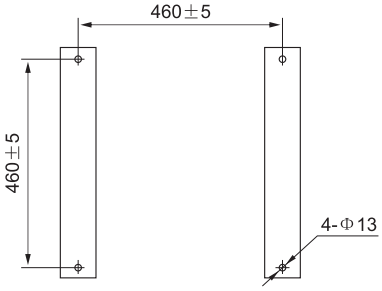
外形尺寸 Overall Dimension