JOSEF约瑟

电压互感器 油浸式
voltage transformer Oil- immersed type

JSJV-6,10 型电压互感器
JSJV-6,10 Voltage transformer type

概述 Description

本型电压互感器为三相五柱油浸式户内型产品，适用于额定频率50Hz或60Hz、额定电压6、10kV及以下的电力系统中，作电能计量、电压监控和继电保护用。

The voltage transformer of the types JSJV-6 and JSJV-10 are three phases, five props,and oil filled products. They are used for metering electric energy, voltage control and relay protection in the electric system up to rated frequency 50Hz or 60Hz and voltage 10kV.

型号含义 Type designation

J S J V - 6,10

- 6,10 — 电压等级，kV(Voltage grade,kV)
- V — V型接线(V type connection)
- J — 油浸式(Oil filled)
- S — 三相(Three phass)
- J — 电压互感器(Voltage transformer)

结构简介 Construction

本型电压互感器的铁心由冷轧硅钢片叠成，采用油浸式绝缘。油箱呈圆形，箱壁上部有吊攀，下部有接地螺栓和放油塞，箱底有四个安装孔。

The iron core of this voltage transformer is laminated by cold-rolled silicon steel sheet.The product is oil filled insulated. The oil box is circular. There have rings on the top of the box, have earthen bolt and stopper of give oil out on the below.

技术参数 Technical data

1.负荷的功率因数：COSφ=0.8(滞后);
2.表面爬电距离：满足Ⅱ级污秽等级;
3.产品性能符合标准：GB1207-1997《电压互感器》;
4.其它技术参数见下表:

1.Power factor of load: COSφ=0.8(lagging);
2.Surface creepage distance:the product accords with the request of Ⅱ class;
3.The voltage transformers are in accordace with GB1207-1997《Voltae transformer》 standards;
4.The other technical data see following table.

型号 Type	额定电压比(V) Rated voltage Tation(V)	级次组合 Accuracy classes combination	额定输出 Rated output(vA)				极限输出 Limit output(vA)	额定绝缘水平 Rated insulated level(kV)
			0.2	0.5	1	3		
JSJV-3	2000/100 3000/100	0.5/1/3		140	250	500	1000	3.6/25/40
JSJV-6	6000/100	0.2/0.5/1/3		140	250	500	1000	7.2/32/60
			80				500	
JSJV10	10000/100	0.2/0.5/1/3		140	250	500	1000	12/42/75
			80				500	

JOSEF约瑟

电压互感器 油浸式
voltage transformer Oil- immersed type

接线原理图 The principle diagram of wiring

三相线路接线图
Wiring diagram of three phase line

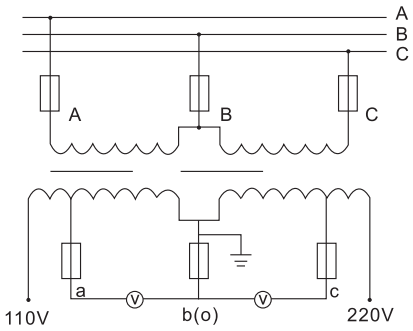

外形尺寸 Overall Dimension

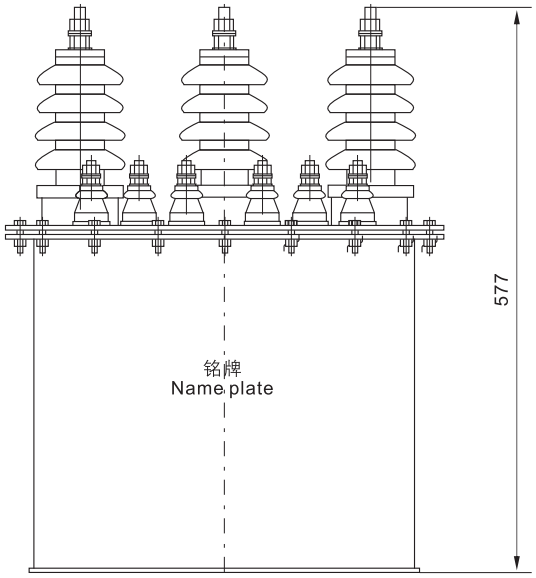

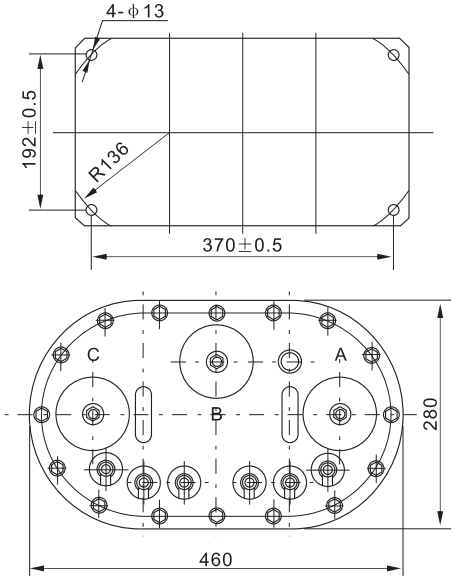

注意事项:
使用时二次绕组不许短路及超负荷运行。
Notice details:
In using , the secondary wineing can’t be short-circuted or opeating over-load.

订货须知 When ordering, please specify the following

1.型号、电压比;
2.准确级及相应的二次负荷;
3.绝缘等级及使用环境。
1.Type and voltage ration;
2.Accuracy class and secondary output;
3.Insulation class and service conditior.