JOSEF约瑟

# 发电机用系列电流互感器 环氧浇注
# Series current transformers for generator resin casting type

## LMZB(3)-20、LMZD(1)-20、LR(B)Z-20 型电流互感器
## LMZB(3)-20、LMZD(1)-20、LR(B)Z-20 Current Transformer

### 概述 Description

本型电流互感器为环氧树脂浇注绝缘母线式产品，适用于额定频率50Hz或60Hz、额定电压20kV及以下的电力系统中，作电能计量、电流测量和继电保护用。

The current transformer of the type LMZB(3)-20,LMZD(1)-20,LR(B)Z-20 is casting resin, full enclosed and busbar type product. It is used for metering electric energy and current, relay protection in the electrical system of rated frequency 50Hz or 60Hz and rated voltage 20kV.

### 型号含义 Type designation

**L M Z B (3) - 20**

- 20 — 额定电压(Rated voltage, kV)
- (3) — 设计序号(Desing NO .)
- B — 带保护级(With protective class)
- Z — 浇注式(Casting type)
- M — 母线式(Busbar type)
- L — 电流互感器(Current transformer)

**L M Z D (1) - 20**

- 20 — 额定电压(Rated voltage, kV)
- (1) — 设计序号(Desing NO .)
- D — 带保护级(With protective class)
- Z — 浇注式(Casting type)
- M — 母线式(Busbar type)
- L — 电流互感器(Current transformer)

**L R (B) Z - 20**

- 20 — 额定电压(Rated voltage, kV)
- Z — 浇注式(Casting type)
- (B) — 带保护级(With protective class)
- R — 套管式(Bushing type)
- L — 电流互感器(Current transformer)

### 结构简介 Construction

本型电流互感器的铁心为圆环形，二次绕组均绕制在铁心圆周上，用环氧树脂合料浇注成形。

The series of current transformers are casting resin insulated, fully enclosed and busbar type. The iron core is circular and the secondary winding goes around the core before casting by epoxy.

### 技术参数 Technical data

1.额定绝缘水平：24/65/125kV;
2.额定二次电流：5A，1A;
3.额定一次电流、准确级、额定输出见表。
1.Rated insulation level:24/65/125kV;
2.Rated secondary current:5A,1A;
3.Rated primary current, accuracy class, rated output ,dynamic and thermal current see form.

JOSEF约瑟

# 发电机用系列电流互感器 环氧浇注
# Series current transformers for generator resin casting type

| 型号 Type | 额定电流比 Rated transformeration ration(A) | 准确级组合 Accuracy classes combination | 准确级及相应的额定输出(VA) Accuracy classes and corresponding rated output(VA) | | | | 额定绝缘水平 Rated insulation level(kV) |
|---|---|---|---|---|---|---|---|
| | | | 0.2 | 0.5 | 5P | 准确限值系数 Accuracy limiting factor | |
| LMZB-20 | 1000/5<br>1500/5<br>2000/5<br>3000/5<br>4000/5<br>5000/5<br>6000/5 | 0.2/5P<br>0.5/5P | 60 | 60 | 60 | 20 | 23/65/125 |
| LMZB-20 | 10000/1<br>1200/1<br>1500/1<br>10000/1<br>12000/5<br>15000/5 | 0.2/0.2<br>0.2/0.5<br>0.5/0.5<br>0.2/5P<br>0.5/5P | 50 | 50 | 30 | 20 | 23/65/125 |
| LMZD1-20 | 3000/5<br>6000/5<br>8000/5<br>10000/5<br>12000/5 | 0.2/5P<br>0.5/5P<br>5P/5P | 30 | 30 | 30 | 20 | 23/65/125 |
| LMZD-20 | 6000/5<br>8000/5<br>10000/5<br>12000/5 | 0.2/0.5<br>0.5/0.5<br>0.5/10P<br>10P/10P | 30<br>50 | 30<br>50 | 30<br>50 | 18<br>15 | 23/65/125 |
| LMZ1-20 | 6000/1<br>8000/1<br>10000/1<br>12000/1<br>6000/5<br>8000/5<br>10000/5<br>12000/5 | 0.2/5P<br>0.5/5P | 60 | 60 | 60 | 20 | 23/65/125 |
| LR(B)Z-20 | 800/5 | 0.2/0.5/10P | 60 | 60 | 60 | 10 | 23/3 |
| | 1200/5<br>1500/5 | 0.2/0.5/5P | 50 | 50 | 50 | 15 | |
| LMZB3-20 | 7500-10000/1<br>7500-10000/5 | 0.2/5P<br>0.5/5P<br>5P/5P | 30 | 30 | 30 | 20 | 23/65/125 |

## 10P 级准确限值系数 Accuracy limit ractor of class10P

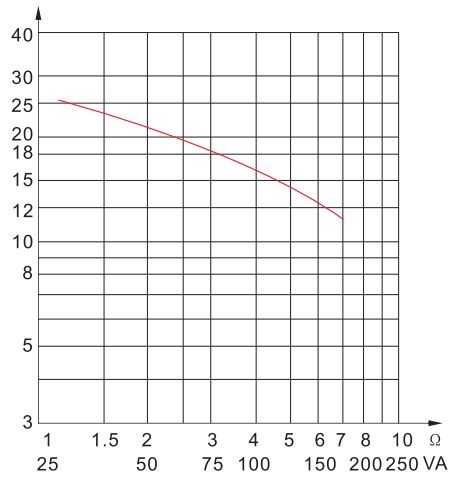

LMZ1-20 5P

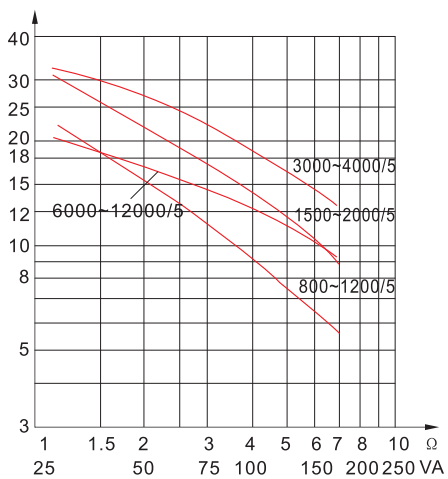

LMZD-20 5P

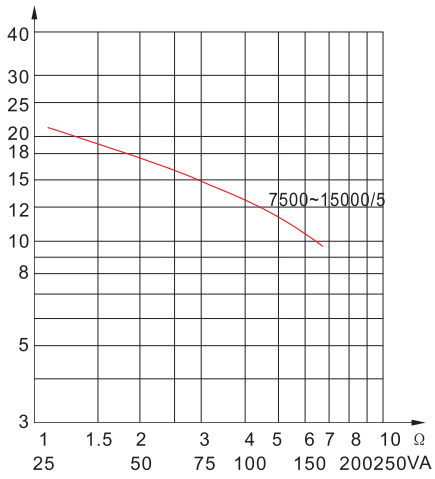

LMZB(2)-20、LR(B)Z-20

JOSEF约瑟

# 发电机用系列电流互感器 环氧浇注
# Series current transformers for generator resin casting type

## 外形尺寸 Overall Dimension

### LMZD1-20 Overall Dimension

| 额定一次电流 Rated primary current(A) | A | B | C | D | E | H | D | A |
|---|---|---|---|---|---|---|---|---|
| 8000/5 3000/5 | 422 | 450 | 540 | 524 | 205 | 769 | 300 | 200 |
| 12000/5 10000/5 | 457 | 500 | 600 | 600 | 217 | 842 | 380 | 250 |

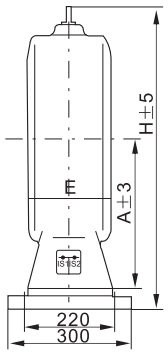


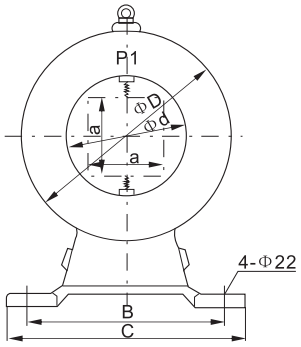


### LMZB-20 Overall Dimension

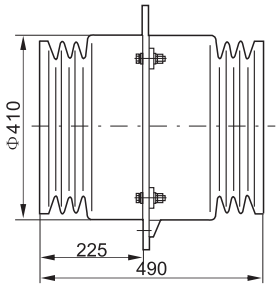


1500-6000A

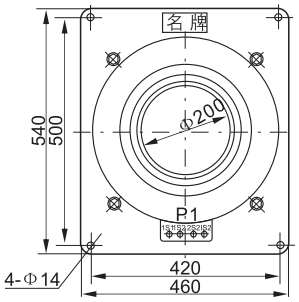


### LMZB-20 Overall Dimension

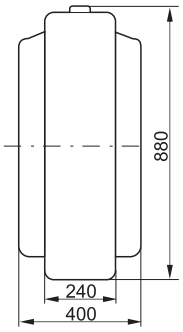


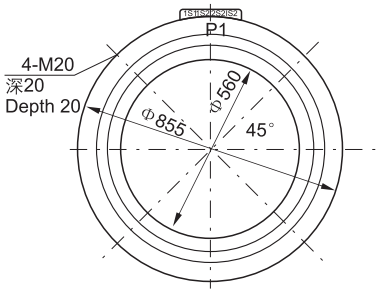


10000-15000A

### LMZD-20 Overall Dimension

| 额定一次电流 Rated primary current(A) | 6000 | 8000 | 10000 |
|---|---|---|---|
| A | 175 | 200 | 225-250 |

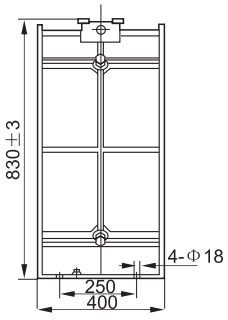


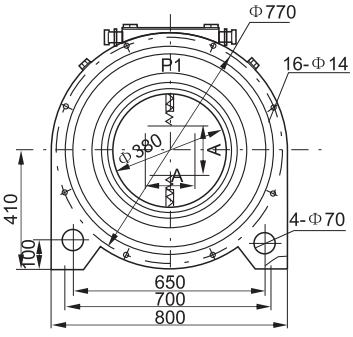

JOSEF约瑟

# 发电机用系列电流互感器 环氧浇注

## Series current transformers for generator resin casting type

LMZD-20 Overall Dimension

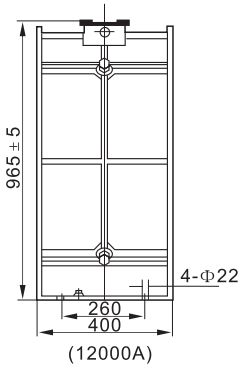


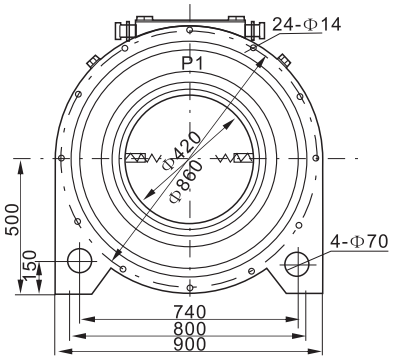


LMZ1-20 Overall Dimension

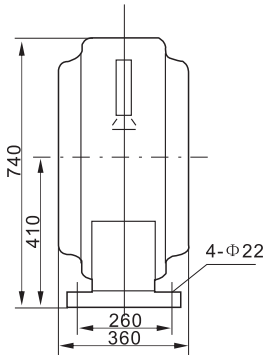


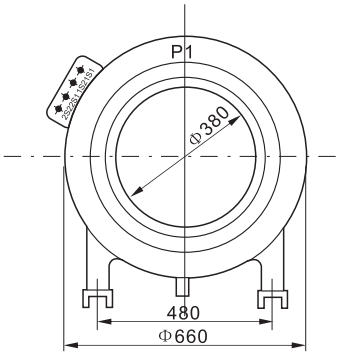


LR(B)Z-20 Overall Dimension

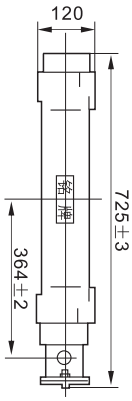


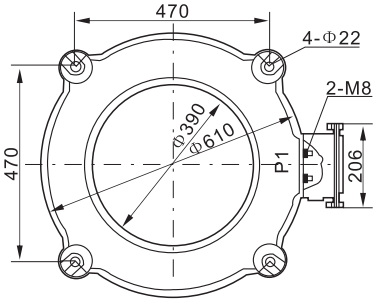

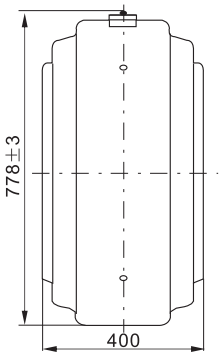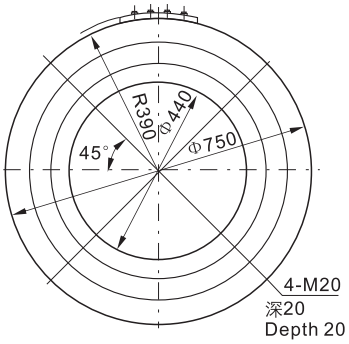
LMZB3-20 Overall Dimension